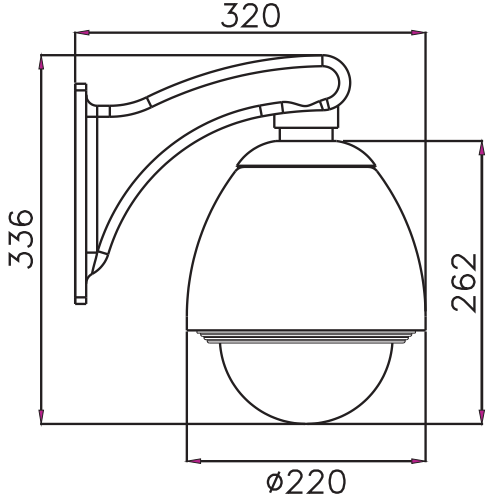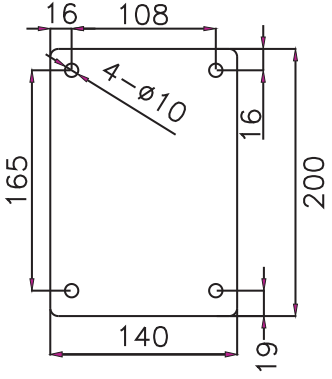VIDEOTREC VT-16W 6” Aluminum Alloy Enclosure